Plastic square shape photoelectric sensors **PTE** series

Features

- ◆ Diffuse reflection working principle;
- ◆Excellent anti-interference performance
- ◆High detection accuracy

Part number

NPN+PNP	NO/NC	PTE-BC30DFB-E2	PTE-BC200DFB-E2

Technical specifications

Detection type	Diffuse reflection	Consumption current	≤40mA
Rated distance [Sn]	30cm(adjustable)200cm (adjustable)	Circuit protection	Short-circuit, overload and reverse polarity
Standard target	White card reflection rate 90%	Response time	< 2ms
Light source	Infrared LED (850nm)	Output indicator	Power: Green LED Output: Yellow LED
Dimensions	50 mm *50 mm *18 mm	Ambient temperature	-25℃…+55℃
Output	NPN+PNP NO/NC	Ambient humidity	35-85%RH (non-condensing)
Supply voltage	10…30 VDC	Voltage withstand	1000V/AC 50/60Hz 60s
Target	Opaque object	Insulation resistance	≥50MΩ(500VDC)
Hysteresis range [%/Sr]	3…20%	Vibration resistance	10…50Hz (0.5mm)
Repeat accuracy [R]	≤5%	Degree of protection	IP67
Load current	≤200mA	Housing material	PC/ABS
Residual voltage	≤2.5V	Connection type	M12 Connector

Dimensions

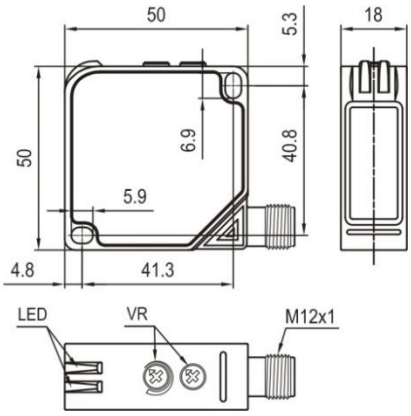

Wiring diagram

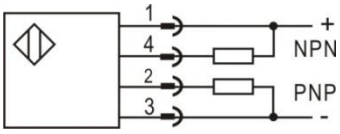

NPN+PNP NO/NC